Smart Sensor Laser Sensor with Built-in Amplifier

ZX1

A CMOS Laser Sensor That's Optimum for Simple Measurements

- A resolution of 0.002 mm that's suitable for simple measurements.
- Stable measurements for any type of workpiece.
- Models available with four different distance specifications.
- Long-distance model for up to 1,000 mm.

Refer to **Safety Precautions** on page 4.

This datasheet contains information only for selecting the appropriate model.
Be sure to read the instruction sheet for usage precautions prior to using the product.

Ordering Information

Sensors (Refer to Dimensions on page 5.)

Appearance	Connection method	Cable length	Sensing distance	Model	
				NPN output	PNP output
	Pre-wired	2 m	50 ± 10 mm (40 60)	ZX1-LD50A61 2M *	ZX1-LD50A81 2M *
		5 m		ZX1-LD50A61 5M	ZX1-LD50A81 5M
	Pre-wired connector	0.5 m		ZX1-LD50A66 0.5M	ZX1-LD50A86 0.5M
	Pre-wired	2 m	100 ± 35 mm (65 135)	ZX1-LD100A61 2M *	ZX1-LD100A81 2M *
		5 m		ZX1-LD100A61 5M	ZX1-LD100A81 5M
	Pre-wired connector	0.5 m		ZX1-LD100A66 0.5M	ZX1-LD100A86 0.5M
	Pre-wired	2 m	300 ± 150 mm (150 450)	ZX1-LD300A61 2M *	ZX1-LD300A81 2M *
		5 m		ZX1-LD300A61 5M	ZX1-LD300A81 5M
	Pre-wired connector	0.5 m		ZX1-LD300A66 0.5M	ZX1-LD300A86 0.5M
	Pre-wired	2 m	600 ± 400 mm (200 1,000)	ZX1-LD600A61 2M *	ZX1-LD600A81 2M *
		5 m		ZX1-LD600A61 5M	ZX1-LD600A81 5M
	Pre-wired connector	0.5 m		ZX1-LD600A66 0.5M	ZX1-LD600A86 0.5M

* Sensors with Class 1 lasers are also available.
Add an "L" to the end of the model number when ordering. (Example: ZX1-LD50A61L 2M)

Accessories (sold separately)

Extension Cables for Pre-wired Connector Models An Extension Cable is not provided with the Sensor. Order an Extension Cable separately.
(Refer to Dimensions on page 6.)

Cable length	Model
10 m	ZX0-XC10R
20 m	ZX0-XC20R

Mounting Brackets A Mounting Bracket is not provided with the Sensor. Order a Mounting Bracket separately if required.
(Refer to Dimensions on page 6.)

Applicable sensors	Appearance	Model	Remarks
ZX1-LD50□ ZX1-LD100□		E39-L180	Mounting Bracket: 1 Nut plate: 1 Phillips screws (M3×30): 2
ZX1-LD300□ ZX1-LD600□		E39-L181	Mounting Bracket: 1 Nut plate: 1 Phillips screws (M4×35): 2

Ratings and Specifications

Item / Model		NPN output	ZX1-LD50A61 ZX1-LD50A66	ZX1-LD100A61 ZX1-LD100A66	ZX1-LD300A61 ZX1-LD300A66	ZX1-LD600A61 ZX1-LD600A66
		PNP output	ZX1-LD50A81 ZX1-LD50A86	ZX1-LD100A81 ZX1-LD100A86	ZX1-LD300A81 ZX1-LD300A86	ZX1-LD600A81 ZX1-LD600A86
Measurement range			50 ± 10 mm	100 ± 35 mm	300 ± 150 mm	600 ± 400 mm
Light source (wave length)			Visible-light semiconductor laser (wavelength: 660 nm, 1 mW max., IEC/EN Class 2, FDA Class 2 *1)			
Spot diameter (typical) (Defined at the measurement center distance) *2			0.17 mm dia.	0.33 mm dia.	0.52 mm dia.	0.56 mm dia.
Power consumption			2,500 mW max. (105 mA max. at 24 VDC, 210 mA max. at 12 VDC)			
Current consumption			250 mA max. (at power supply voltage 10 VDC)			
Control output			Load power supply voltage: 30 VDC max., Load current: 100 mA max. (Residual voltage: 1 V max. (load current 10 mA or less), 2 V max. (load current of 10 to 100 mA))			
Analog output			Current output: 4 to 20 mA, maximum load resistance: 300 Ω (The output is 20 mA for the nearest point in the measurement range in respect to the Sensor and 4 mA for the farthest point.)			
Functions			Smart tuning, keep function, background removal, OFF-delay timer, ON-delay timer, one-shot timer, ON/OFF-delay timer, zero reset, area output, eco function, hysteresis width setting, and setting initialization			
Indicators			Digital display (red), output indicator (OUT1, OUT2) (orange), zero reset indicator (orange), menu indicator (orange), laser ON indicator (green), and smart tuning indicator (blue)			
Response time	**Judgment output**		Super-high-speed (SHS) Mode: 1 ms High-speed (HS) Mode: 10 ms Standard (Stnd) Mode : 100 ms			
	Laser OFF input		200 ms max.			
	Zero reset input		200 ms max.			
Temperature characteristic *3			0.03% F.S./°C			0.04% F.S./°C
Linearity *4			±0.15% F.S.		±0.25% F.S.	±0.25% F.S. (200 to 600 mm) ±0.5% F.S. (entire range)
Resolution *5			2 μm	7 μm	30 μm	80 μm
Ambient illumination			Illumination on received light surface: 7,500 lx or less (incandescent light)		Illumination on received light surface: 5,000 lx or less (incandescent light)	
Ambient temperature			Operating: -10 to +55°C, Storage: -15 to +70°C (with no icing or condensation)			
Ambient humidity			Operating and storage: 35% to 85% (with no condensation)			
Dielectric strength			1,000 VAC, 50/60 Hz, 1 minute			
Vibration resistance (destruction)			10 to 55 Hz, 1.5-mm double amplitude, 2 hours each in X, Y, and Z directions			
Shock resistance (destruction)			500 m/s^2 3 times each in X, Y, and Z directions			
Degree of protection *6			IEC 60529, IP67			
Connection method *7			Pre-wired model (Standard cable length: 2 m, 5 m) Pre-wired connector model (Standard cable length: 0.5 m)			
Weight (packed state/ sensor only)	**Pre-wired models (2 m)**		Approx. 240 g / Approx. 180 g		Approx. 270 g / Approx. 210 g	
	Pre-wired models (5 m)		Approx. 450 g / Approx. 330 g		Approx. 480 g / Approx. 360 g	
	Pre-wired connector models (0.5 m)		Approx. 170 g / Approx. 110 g		Approx. 200 g / Approx. 140 g	
Materials			Case and cover: PBT (polybutylene terephthalate), Optical window: Glass, Cable: PVC, Mounting hole part: SUS303			
Accessories			Instruction sheet and Laser warning label (English)			

Note: 1. False detection outside the measurement range can occur in the case of an object with high reflectance.
2. Refer to the next page for the ratings and specifications of Sensors with Class 1 lasers.

*1. Classified as Class 2 by IEC60825-1 criteria in accordance with the FDA standard previsions of Laser Notice No. 50. CDRH registration has been completed. (Center for Devices and Radiological Health) (Accession Number: 1210041)

*2. Spot diameter: Defined as 1/e^2 (13.5%) of the central intensity at the measurement center distance.
False detections can occur in the case there is light leakage outside the defined region and the surroundings of the target object have a high reflectance in comparison to the target object.
Accurate measurements may not be possible for workpieces that are smaller than the spot diameter.

*3. Temperature characteristic: Value for the case the space between the sensor and Omron's standard target object is secured by an aluminum jig. (Measured at the measurement center distance)

*4. Linearity: Indicates the error with respect to the ideal straight line of the displacement output in the case of measuring Omron's standard target object (white ceramic) at a temperature of 25 °C.
Linearity and measured value may vary depending on target object.

*5. Resolution: Defined in Standard Mode for Omron's standard target object (white ceramic) after executing Smart Tuning.
The resolution indicates the repetition accuracy for a still workpiece. Not an indication of the distance accuracy.
Resolution performance may not be satisfied in a strong electromagnetic field.

*6. IP67 protection applies to the connector on pre-wired connector models if an extension cable is connected.

*7. Use a Pre-wired Connector Model together with an Extension Cable (10 m or 20 m).

Ratings and Specifications of Sensors with Class 1 lasers (ZX1-LD□L)

The ratings and specifications that are different from those of the Sensors with Class 2 lasers are given below.

Model / Item	ZX1-LD50A61L/ZX1-LD50A81L ZX1-LD100A61L/ZX1-LD100A81L	ZX1-LD300A61L/ZX1-LD300A81L ZX1-LD600A61L/ZX1-LD600A81L
FDA Class	Class1 0.24mW max.	
IEC/EN Class	Class1 0.24mW max.	
Ambient illumination	Illumination on received light surface 5,000 lx or less (incandescent light)	Illumination on received light surface 2,500 lx or less (incandescent light)
Connection method	Pre-wired model (2 m)	
Accessories	Instruction sheet and Explanatory label (English), FDA certification label	

Accession Number: 1210041

Engineering Data (Typical)

Angle Characteristic

ZX1-LD50□
Side-to-side Inclination

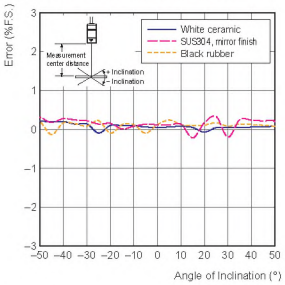

ZX1-LD100□
Side-to-side Inclination

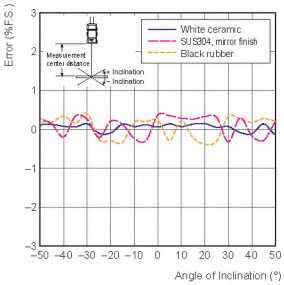

ZX1-LD300□
Side-to-side Inclination

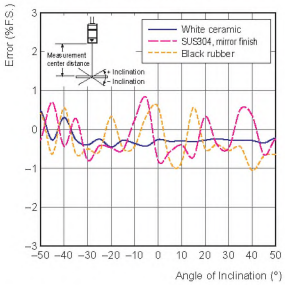

ZX1-LD600□
Side-to-side Inclination

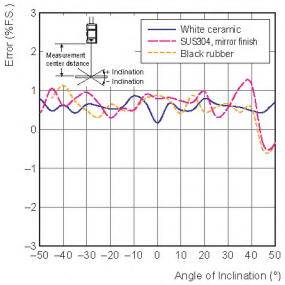

ZX1-LD50□
Front-to-back Inclination

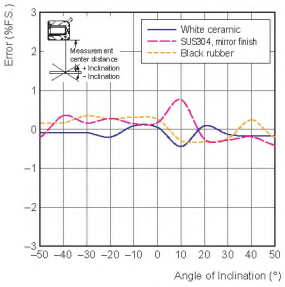

ZX1-LD100□
Front-to-back Inclination

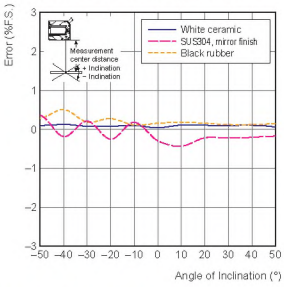

ZX1-LD300□
Front-to-back Inclination

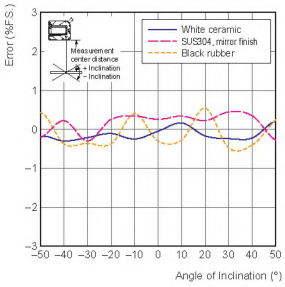

ZX1-LD600□
Front-to-back Inclination

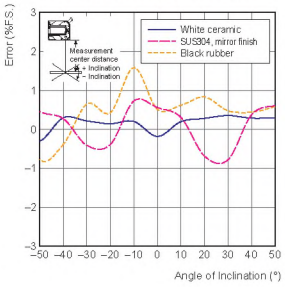

Linearity Characteristic for Different Materials

ZX1-LD50□

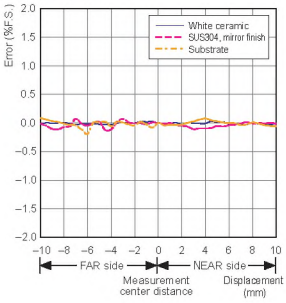

ZX1-LD100□

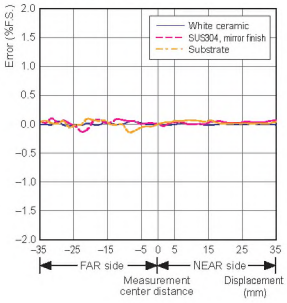

ZX1-LD300□

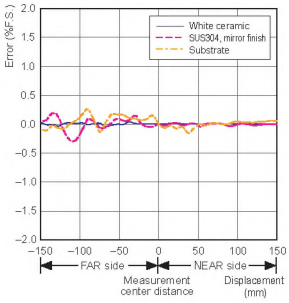

ZX1-LD600□

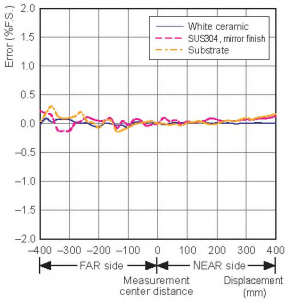

Measurement diagram

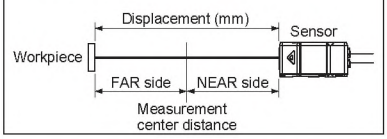

Note: 1. Measurement conditions for the ZX1-LD□□: Ambient temperature of 25°C in Standard Mode after executing Smart Tuning.
2. The ambient conditions or workpiece may adversely affect the engineering data of the ZX1-LD□L.
3. The X-axis displacement indicates the measurement distance displayed on a digital display.
The measurement distance displayed on a digital display takes the measurement center distance as 0 and displays the near side of the Sensor as positive and the far side as negative.

I/O Circuit Diagrams

NPN Output Model (Negative Common)

ZX1-LD50A61(L) /ZX1-LD50A66
ZX1-LD100A61(L) /ZX1-LD100A66
ZX1-LD300A61(L) /ZX1-LD300A66
ZX1-LD600A61(L) /ZX1-LD600A66

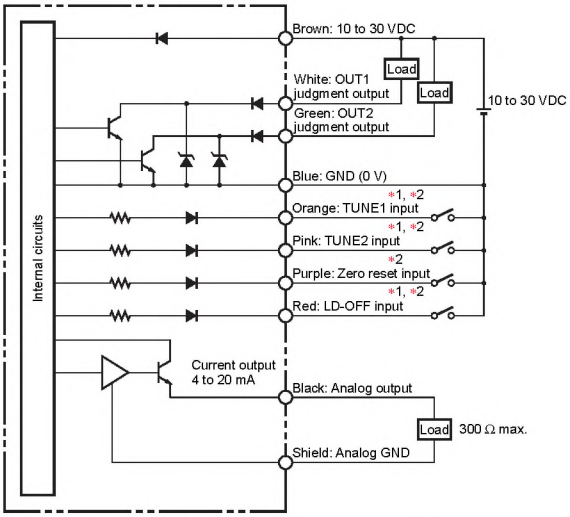

PNP Output Model (Positive Common)

ZX1-LD50A81(L) /ZX1-LD50A86
ZX1-LD100A81(L) /ZX1-LD100A86
ZX1-LD300A81(L) /ZX1-LD300A86
ZX1-LD600A81(L) /ZX1-LD600A86

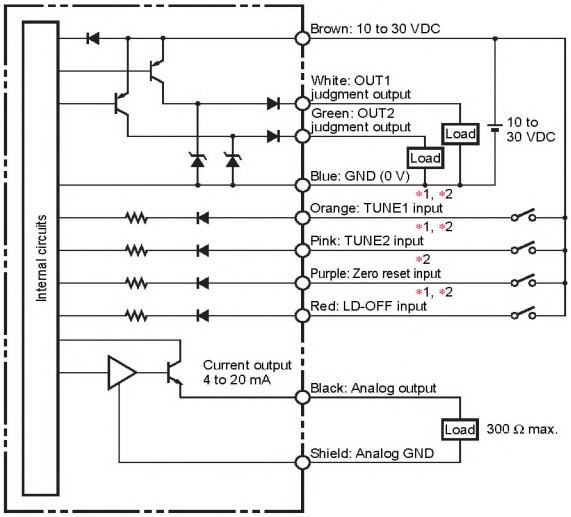

*1. TUNE1 input: tuning external input for channel 1
TUNE2 input: tuning external input for channel 2
LD-OFF input: Laser OFF input
*2. The input specification is as follows:

	NPN Output Model	PNP Output Model
ON	Short-circuited with 0-V terminal or 1.5 V max.	Supply voltage short-circuited or supply voltage within -1.5 V
OFF	Open (leakage current: 0.1 mA max.)	Open (leakage current: 0.1 mA max.)

Timing Charts

TUNE1 Input / TUNE2 Input

(1) Time identification tuning type

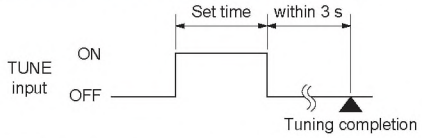

(2) Tuning type other than time identification

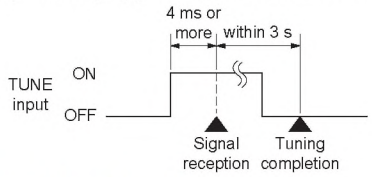

Zero Reset Input

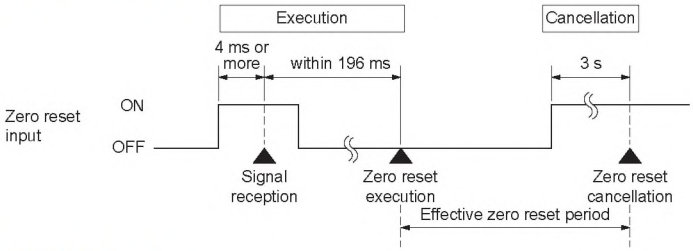

LD-OFF Input

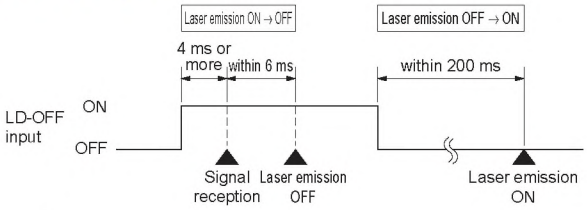

Safety Precautions

This datasheet contains information only for selecting the appropriate model.
Be sure to read the Instruction Sheet for usage precautions prior to using the product.

Laser Safety

⚠ WARNING

ZX1-LD□□□: Class 2, ZX1-LD□□□L: Class1

Do not expose your eyes to the laser radiation either directly or indirectly (i.e., after reflection from a mirror or shiny surface).
The laser radiation has a high power density and exposure may result in loss of sight.

Do not disassemble the product.
Doing so may cause the laser beam to leak, resulting in the danger of visual impairment.

Note: For Precautions for safe use and Precautions for correct use, refer to the Instruction Sheet supplied with the product.

Dimensions

(Unit: mm)
Tolerance class IT16 applies to dimensions in this datasheet unless otherwise specified.

Sensors

Pre-wired Models

ZX1-LD50A61(L)
ZX1-LD50A81(L)
ZX1-LD100A61(L)
ZX1-LD100A81(L)

Pre-wired Connector Models

ZX1-LD50A66
ZX1-LD50A86
ZX1-LD100A66
ZX1-LD100A86

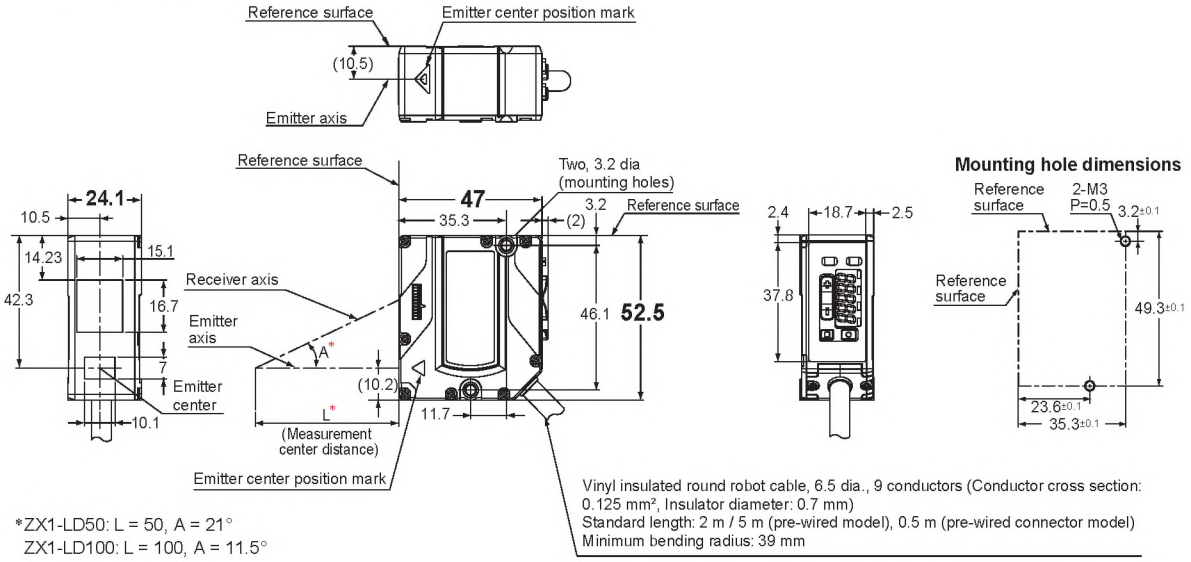

*ZX1-LD50: L = 50, A = 21°
ZX1-LD100: L = 100, A = 11.5°

Vinyl insulated round robot cable, 6.5 dia., 9 conductors (Conductor cross section: 0.125 mm², Insulator diameter: 0.7 mm)
Standard length: 2 m / 5 m (pre-wired model), 0.5 m (pre-wired connector model)
Minimum bending radius: 39 mm

Pre-wired Models

ZX1-LD300A61(L)
ZX1-LD300A81(L)
ZX1-LD600A61(L)
ZX1-LD600A81(L)

Pre-wired Connector Models

ZX1-LD300A66
ZX1-LD300A86
ZX1-LD600A66
ZX1-LD600A86

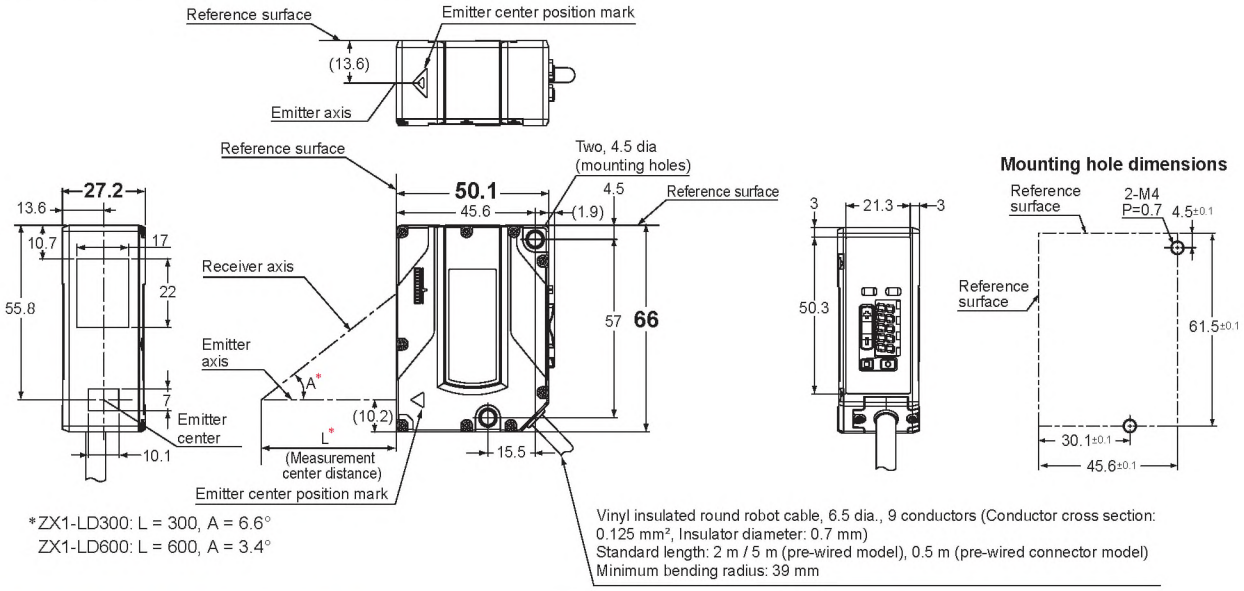

*ZX1-LD300: L = 300, A = 6.6°
ZX1-LD600: L = 600, A = 3.4°

Vinyl insulated round robot cable, 6.5 dia., 9 conductors (Conductor cross section: 0.125 mm², Insulator diameter: 0.7 mm)
Standard length: 2 m / 5 m (pre-wired model), 0.5 m (pre-wired connector model)
Minimum bending radius: 39 mm

Display, Indicators, and Controls

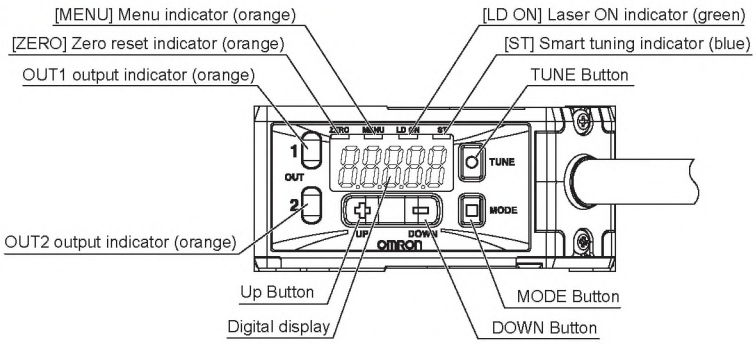

Pre-wired connector

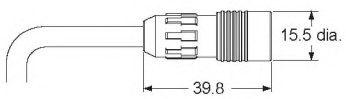

Accessories (sold separately)

Extension Cables for Pre-wired Connector Models

ZX0-XC10R (10 m)
ZX0-XC20R (20 m)

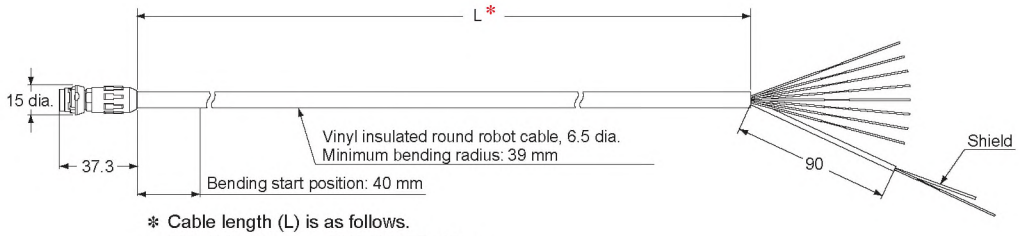

* Cable length (L) is as follows.
ZX0-XC10R: 10 m, ZX0-XC20R: 20 m

Mounting Bracket for ZX1-LD50□/ZX1-LD100□

E39-L180

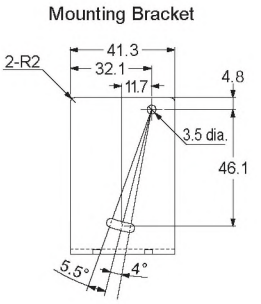

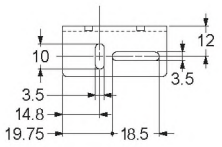

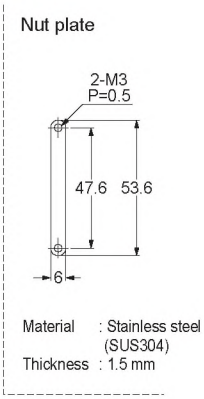

Material : Stainless steel (SUS304)
Thickness : 2.0 mm
Accessories : Two phillips screws (M3×30, P = 0.5, Stainless steel) and one nut plate

Mounting Bracket for ZX1-LD300□/ZX1-LD600□

E39-L181

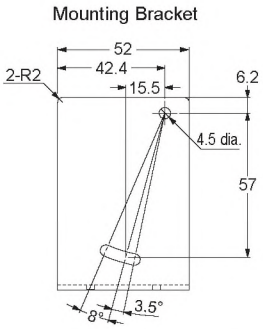

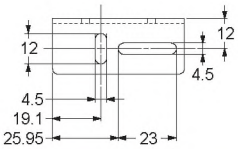

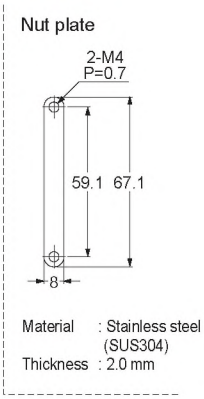

Material : Stainless steel (SUS304)
Thickness : 2.0 mm
Accessories : Two phillips screws (M4×35, P = 0.7, Stainless steel) and one nut plate

Installation Method (ZX1-LD50□/ZX1-LD100□)

Using E39-L180 Mounting Bracket

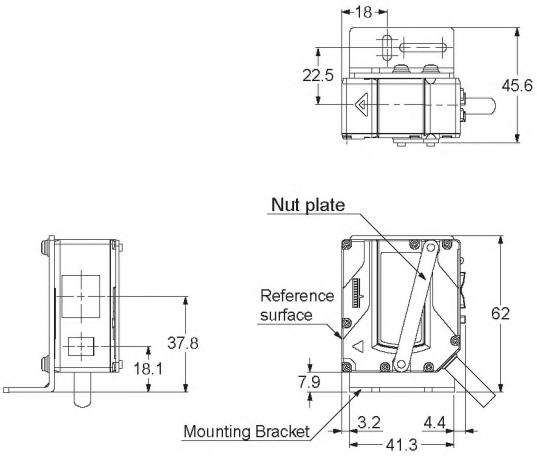

Installation Method (ZX1-LD300□/ZX1-LD600□)
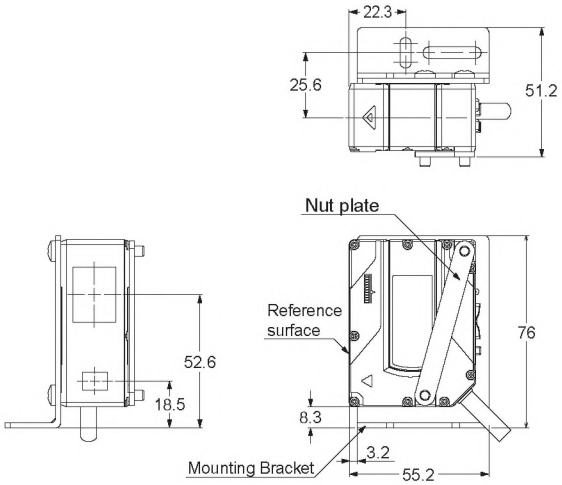
Using E39-L181 Mounting Bracket